www.hifisonix.com

APSU
Amplifier Power Supply Unit

This low-noise power supply is designed specifically for stereo Class A amplifiers with up to 60W RMS per channel output and stereo Class AB amplifiers up to 200W per channel. If you adhere to the APSU wiring diagram on slide 10, you can readily achieve peak hum and mains noise levels of -120 dBr on your amplifier*. The power supply rectifier is mechanically coupled to the amplifier baseplate metalwork, which acts as the heatsink. The continuous maximum load is 500W and the peak load capability (for 2 minutes) is 800W

Read this entire document carefully before assembling the board.

**Example: on the 60 Watt RMS class A ax-Amplifier, the measured output mains noise peaks were better than -132 dB reference 2 x 60W RMS output, total power consumption 360W. For class AB amplifiers, even better figures are attainable.*

© Andrew C. Russell 2025, 2026

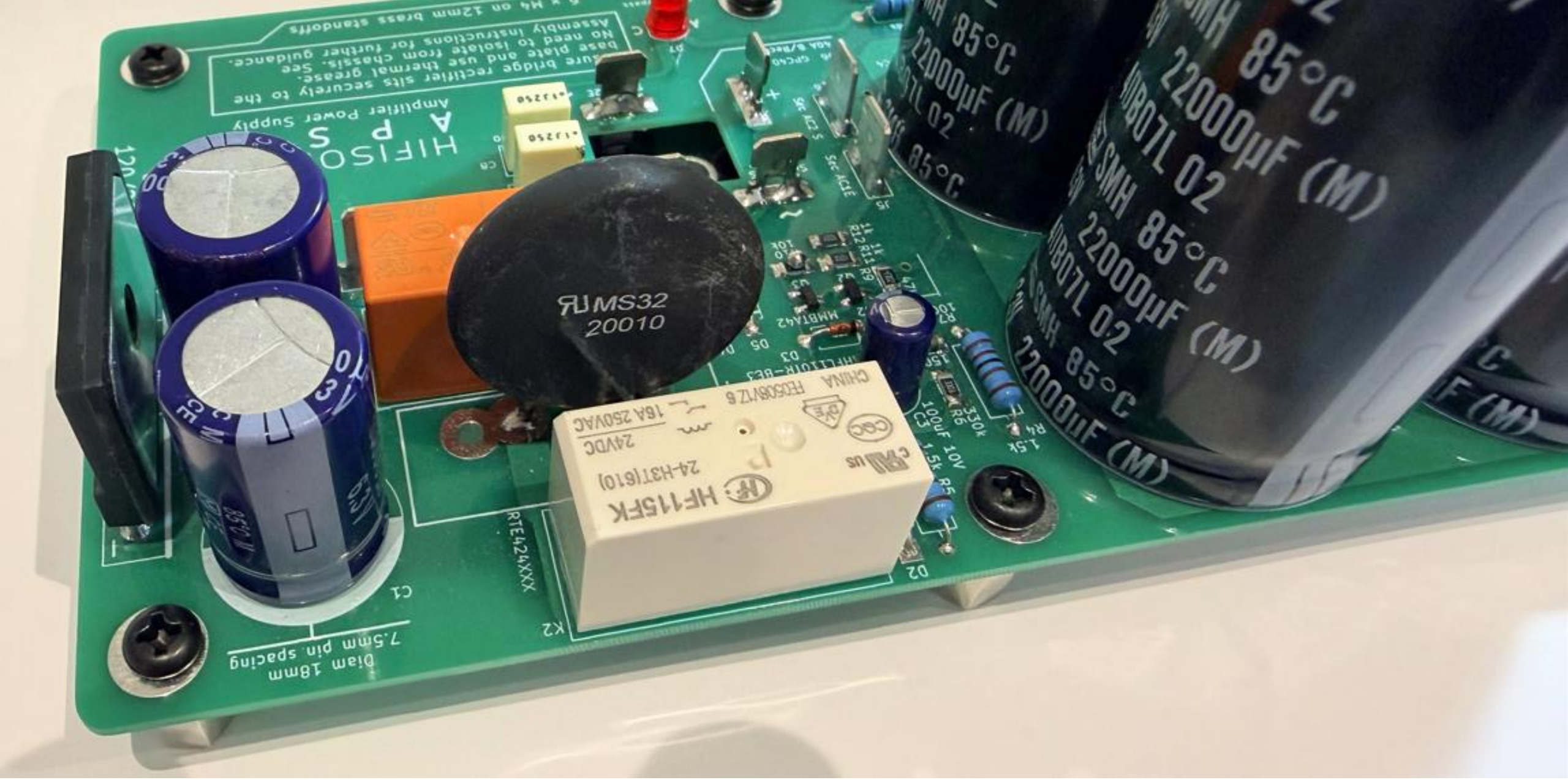
HIFISO
A P S
Amplifier Power Supply
MS32
20010
HF115FK
24-H3T(610)
24VDC
16A 250VAC
22000µF (M)
85°C
SMH
RTE424XXX
Diam 18mm
7.5mm pin spacing

WARNING DISCLAIMER

This project is intended for experienced DIY constructors.

This project involves wiring up mains voltages.

Do NOT attempt this project unless you are completely aware of the dangers of mains voltages and fully understand mains voltage wiring safety practices and conventions.

A wiring mistake can be lethal. Do not take any risks.

Seek professional advice if you are not sure.

Always adhere strictly to the electrical regulations in your country.

WARNING DISCLAIMER

When wiring or debugging the PSU, always unplug the amplifier from the mains.

APSU Overview – Features and Benefits

- High power – up to 500W continuous load, 800W peak power. Great for 200W per channel class AB power amps
- Mains DC blocking – no transformer ‘growling’ with mains DC offsets
- Mains inrush control – no switch on mains dip and limits secondary rectifier peak currents at switch on
- Power ON/OFF control – uses 50mA low-current anti-vandal switch (switch must be 120/240 VAC rated)
- 44,000 uF capacitance per rail – low rail ripple at high load currents
- Load + Ripple current rating of ~15A per rail with recommended capacitors
- Maximum supply voltage of ±63V - capable of supplying high power amplifiers
- Very compact – measures 177.5mm long x 95mm wide x 75mm high, easily fits into any chassis
- DSTHP board laid out for very low radiated noise and zero common impedance coupling – easy to get ultra low noise with your amplifier build

APSU: General Comments

- This power supply works with any amplifier requiring supply voltages from ±24VDC up to ±63V. The absolute upper voltage limit is set by the reservoir capacitor rating at 63VDC and the lower limit by the 24VDC relay used.
- The high current loop conductors are overlaid on opposing sides of the PCB, minimising the radiating loop areas; careful attention to the 0V return PCB routing, and short PCB tracks, ensures common impedance coupling is non-existent, and the power supply is therefore extremely quiet.
- One of the perennial problems in DIY amp builds is how to conveniently limit mains inrush currents, which can cause mains voltage dips and/or damage switch contacts, and damage the secondary side rectifier bridge. On a large power supply, the peak transaformer inrush currents usually exceed 150A for 2-3 cycles, and can be as high as 400A in some cases. The reservoir capacitor charging currents of 30-40A for 3-5 cycles must also be considered. This power supply solves that problem using a 250J NTC thermistor, which is bypassed by a relay after a few seconds.
- An effective mains DC blocker circuit prevents partial core saturation, which usually results in a 'growling' sound from the transformer.
- The other problem is how to conveniently control mains ON/OFF power without recourse to a high-current mains AC voltage-rated switch or capacitor derived low voltage DC supply for the mains switching relay. This PSU makes use of a mains voltage relay coil with contacts rated at 8A continuous and 15A peak to switch the incoming mains supply. Control of the relay coil is via an attractive 250VAC 50mA anti-vandal switch, of which there are numerous options for the constructor. The PCB provides a current-limited output to drive the indicator LED directly.
- The supply and AC detect connections are conveniently grouped for use with the Hifisonix Speaker Protection Board
- There is zero standby current draw when the power supply is in the OFF condition.

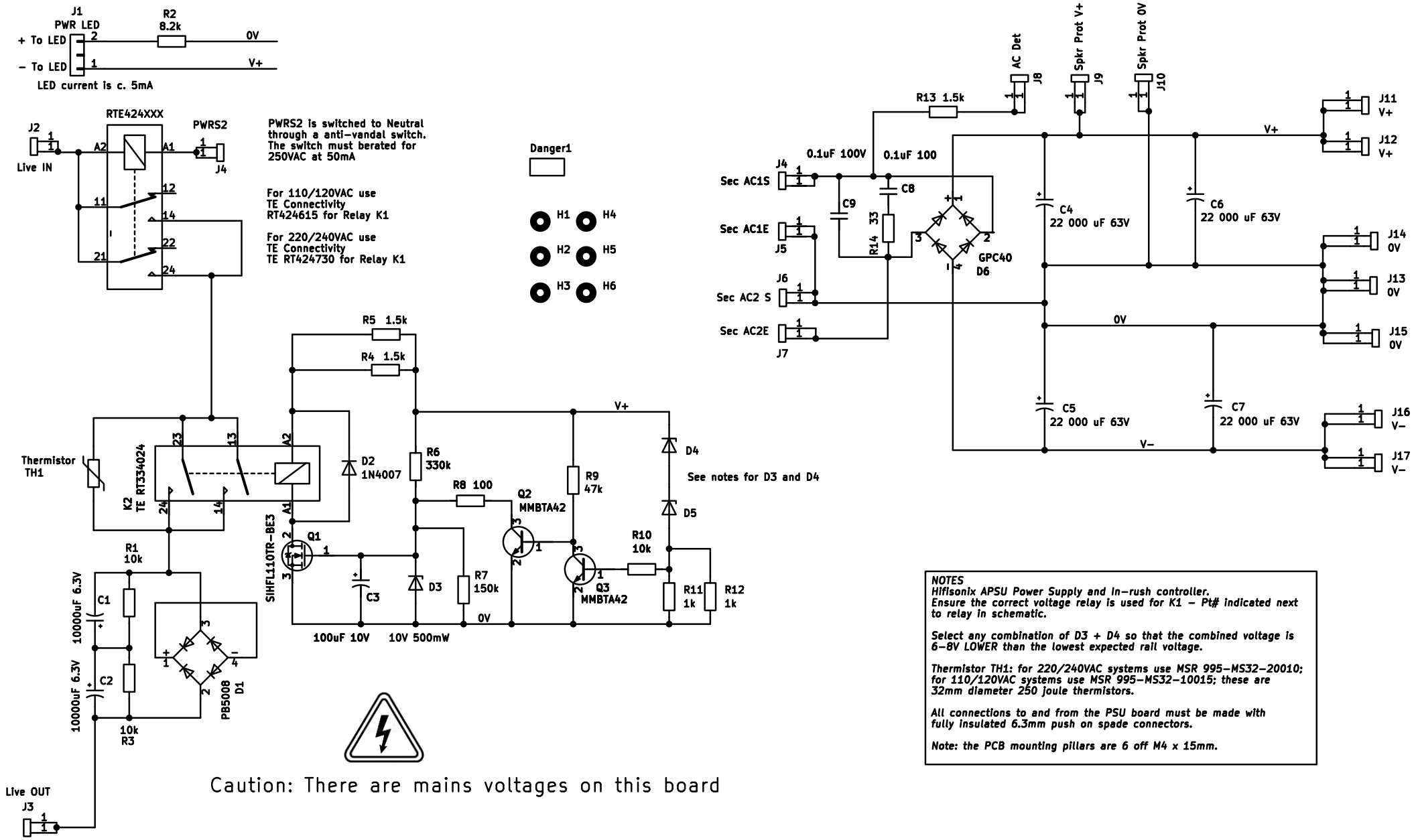
J1
PWR LED
R2
8.2k
+ To LED
2
0V
– To LED
1
V+
LED current is c. 5mA
RTE424XXX
PWRS2
J2
Live IN
A2
A1
J4
11
12
14
22
21
24
PWRS2 is switched to Neutral through a anti-vandal switch. The switch must berated for 250VAC at 50mA
For 110/120VAC use TE Connectivity RT424615 for Relay K1
For 220/240VAC use TE Connectivity TE RT424730 for Relay K1
Danger1
H1
H4
H2
H5
H3
H6
R5 1.5k
R4 1.5k
V+
Thermistor TH1
K2 TE RT334024
23
13
A2
24
14
A1
D2 1N4007
R6 330k
R8 100
Q2 MMBTA42
R9 47k
D4
See notes for D3 and D5
D5
SIHFL110TR-BE3
Q1
R1 10k
C1 10000uF 6.3V
C2 10000uF 6.3V
10k R3
PB5008 D1
C3
D3
R7 150k
0V
R10 10k
Q3 MMBTA42
R11 1k
R12 1k
100uF 10V
10V 500mW
Live OUT
J3
Caution: There are mains voltages on this board
R13 1.5k
AC Det
J8
Spkr Prot V+
J9
Spkr Prot 0V
J10
J11 V+
J12 V+
J4
Sec AC1S
0.1uF 100V
0.1uF 100
C8
C9
R14 33
GPC40 D6
C4 22 000 uF 63V
C6 22 000 uF 63V
J14 0V
J13 0V
J15 0V
Sec AC1E
J5
J6
Sec AC2 S
Sec AC2E
J7
0V
C5 22 000 uF 63V
C7 22 000 uF 63V
V–
J16 V–
J17 V–
NOTES
Hifisonix APSU Power Supply and In-rush controller.
Ensure the correct voltage relay is used for K1 – Pt# indicated next to relay in schematic.
Select any combination of D3 + D4 so that the combined voltage is 6-8V LOWER than the lowest expected rail voltage.
Thermistor TH1: for 220/240VAC systems use MSR 995-MS32-20010; for 110/120VAC systems use MSR 995-MS32-10015; these are 32mm diameter 250 joule thermistors.
All connections to and from the PSU board must be made with fully insulated 6.3mm push on spade connectors.
Note: the PCB mounting pillars are 6 off M4 x 15mm.

APSU Circuit Description (values used in this description are for +-56V – see later slide for other voltages)

- **Power Supply Section**. The transformer secondaries feed into the PSU board on J4 through J7 before passing through a single 50A rated bridge rectifier D6 (GBPC50 series). This is followed by 2 x 22 000uF 63V filter capacitors on each rail (C4 and C6 for V+ and C5 and C7 for V-). The output connectors are J11 through J17.
- **Power ON/OFF control.** A 110VAC or 220VAC Relay is used (K1). The coil current at mains AC voltage is in the region of 15-20mA, allowing the use of an attractive front panel-mounted anti-vandal switch (see the schematic for the relevant AC relay voltage-dependent Mouser part numbers) to switch the relay coil. The anti-vandal switch must be rated for mains AC voltage operation. Do not use anti-vandal switches that are not rated for AC mains voltage operation. A contact current rating of 50mA is adequate. The front panel anti-vandal switch indicator LED is powered J1 and the LED current is limited by R2 which sets it between 4.7mA at 40V and 7.7mA at 63V DC outputs. Note that the indicator LED will remain illuminated for a few minutes after power down as the power supply discharges.
- **Inrush delay circuit.** Zener diodes D4 and D5 ensure that transistor Q3 (MMBTA42) only conducts when the supply voltage exceeds their total series voltage plus 1 to 3V. Prior to Q3 conducting, Q2 (MMBTA42) is conducting with base bias being provided by R9 (47k), which in turn holds the delay timing capacitor C1 (100uF 10V) at 0V via R8. Once Q3 starts to conduct, Q2 is turned off, and C3 begins to charge via R6 (330k). When the voltage across C3 reaches ~2.5V, Q1 (SIHFL110 SOT223 Standard Level mosfet) switches on, energizing K2 (24V relay), which bypasses the thermister TH1. When the amplifier is powered down, as soon as the voltage drops below the combined voltage of D4 plus D5, Q3 turns off, allowing Q2 to conduct again, which then resets the timing capacitor C3.
- R7 (150k) reduces the maximum voltage across C1 at high voltages and helps increase the delay time without recourse to a larger value C3 timing cap (100uF 10V). R8 (100 ohms) reduces the peak current into Q2 collector to ~100mA while D3 is included to protect the mosfet gate from potentially excessive voltages. R4 and R5 are the voltage dropper resistors that allow the 24V relay to be used and D2 is the relay coil flyback clamp diode.
- While TH1 is in circuit, the inrush current (transformer magnetising current and reservoir cap charging currents) is limited to about 15A peak, which prevents mains dips, and limits the peak current through relay K1's contacts
- **Front panel power switch. Important notes.** Note carefully that relay K1 and the thermistor must be selected per the mains operating voltage in your region for either 110/120 VAC or 220/240 VAC. The thermistor (a 250J devices) is set for 10 ohms for 110/120 VAC or 20 ohms for 220/240 VAC devices.
- **Selecting D3 and D4**. The total voltage across D4 + D5 should be 1-3 less than the lowest supply voltage you will expect. If its towards 10V below your total supply voltage, remove R12 from the PCB. This will limit the dissipation in the diodes. Make up this value with any combination of Zener voltages for D4 and D5. The devices should be rated for 400mW or greater.
- **Layout and termination.** The power section of the board is carefully laid out to minimise loop areas, and thus EM radiation. The power supply and AC Detect connections (J8 through J10) for the Hifisonix speaker protection board are conveniently located together, which facilitates a neat wiring job during final assembly of the amplifier.
- **Mains DC blocking circuit**. The DC Bocking circuit consists of a bridge rectifier D1 (PB500B) and two 10,000uF 6.3V capacitors C1 and C2. At 50/60 Hz and any other mains harmonics, the capacitors are a short to AC and bypass D1, however, mains DC offsets of up to 1.4V are blocked by D1. This scheme very effectively reduces mains transformer 'growling' in the presence of mains DC offsets, often caused by cheap, low-power appliances that block 1 half of the mains cycle with a rectifier to reduce power – a hairdryer with a 'cool' setting being a good example.

Finally, since the power supply board has mains voltages present on it, exercise extreme caution during testing, wiring and debugging. If you are unsure of how to deal with mains voltages, seek professional help.

Remember to place Gorilla tape over the tops of C1 and C2

Important construction notes

For this PSU to be assembled correctly and to fully realise the noise benefits, note the following

- 6 off M4 x 12mm hex brass standoffs are used to mount the board to the chassis. You will also need 12 M4 lock washers and 12 M4 x 5 mm or 6 mm machine screws

- The bridge rectifier must make mechanical and thermal contact with the chassis base plate – see later slides for details.

- The secondary AC wires to the bridge rectifier must be connected to the rectifier by 6.3mm push on spade receptacles (preferable) or soldered. *Do not mount the rectifier away from the board and run wires to the board* – this creates large radiating loops and the high capacitor bank charging currents mean you will generate large mag fields, degrading the noise performance of your system

Top Overlay

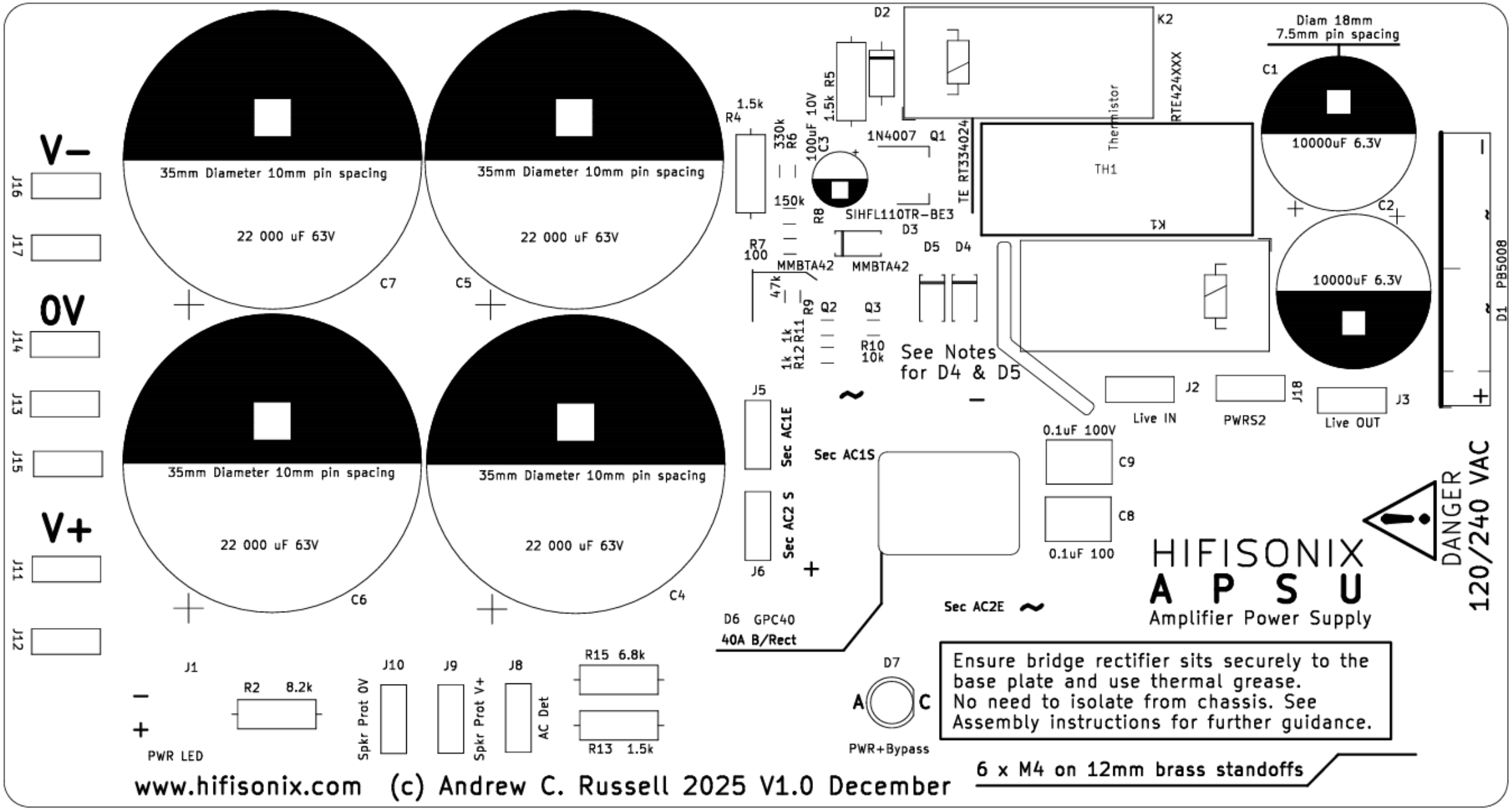
V−
0V
V+
J16
J17
J14
J13
J15
J11
J12
35mm Diameter 10mm pin spacing
22 000 uF 63V
C7
C5
C6
C4
D2
K2
Diam 18mm
7.5mm pin spacing
C1
10000uF 6.3V
C2
R4 1.5k
R6 330k
150k
R5 1.5k
100uF 10V
C3
1N4007
Q1
TE RT334024
Thermistor
RTE424XXX
TH1
K1
R8
SIHFL110TR-BE3
D3
D5
D4
R7 100
MMBTA42
MMBTA42
47k
R9
Q2
Q3
1k R11
1k R12
R10 10k
See Notes
for D4 & D5
J5
Sec AC1E
Sec AC1S
J6
Sec AC2 S
Sec AC2E
0.1uF 100V
C9
C8
0.1uF 100
J2
Live IN
PWRS2
J18
J3
Live OUT
D1 PB5008
D6 GPC40
40A B/Rect
D7
A
C
PWR+Bypass
J1
R2 8.2k
PWR LED
J10
Spkr Prot 0V
J9
Spkr Prot V+
J8
AC Det
R15 6.8k
R13 1.5k
HIFISONIX
A P S U
Amplifier Power Supply
DANGER
120/240 VAC
Ensure bridge rectifier sits securely to the base plate and use thermal grease.
No need to isolate from chassis. See Assembly instructions for further guidance.
6 x M4 on 12mm brass standoffs
www.hifisonix.com (c) Andrew C. Russell 2025 V1.0 December

Bottom Overlay

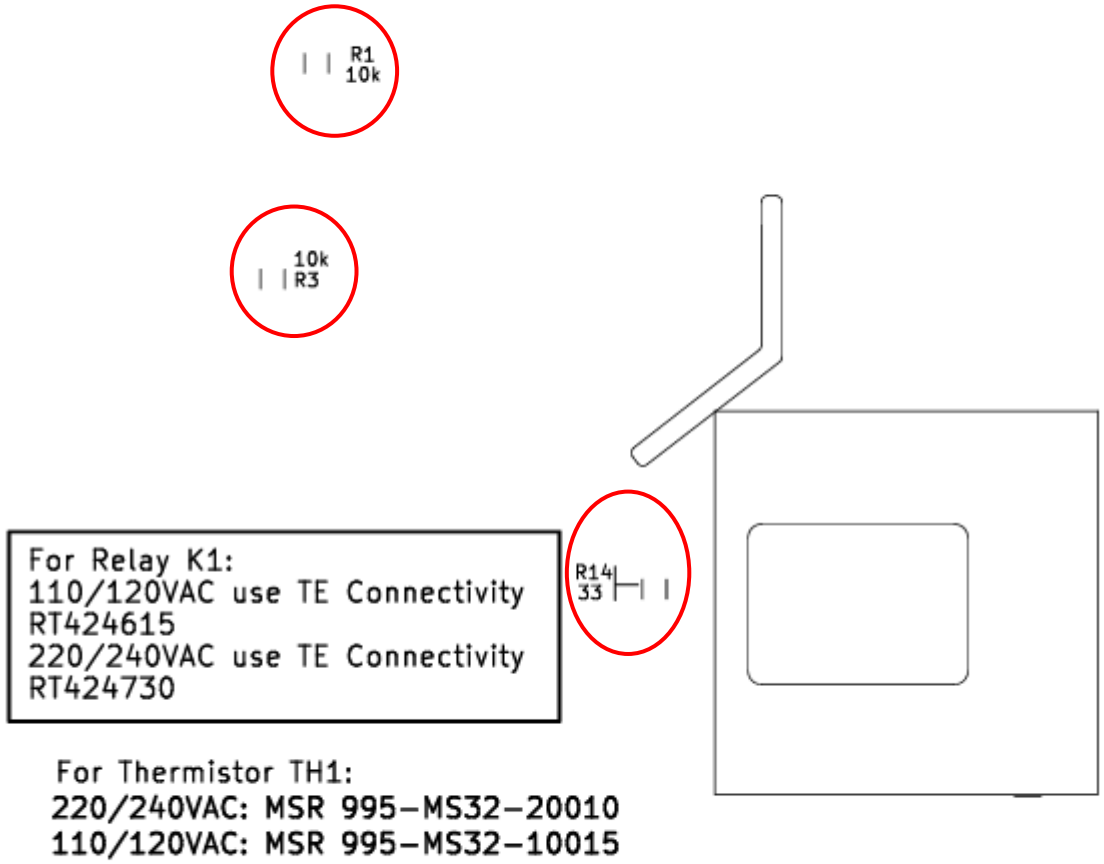

www.hifisonix.com

How to add copper wire to improve current handling capacity – underside view of PCB

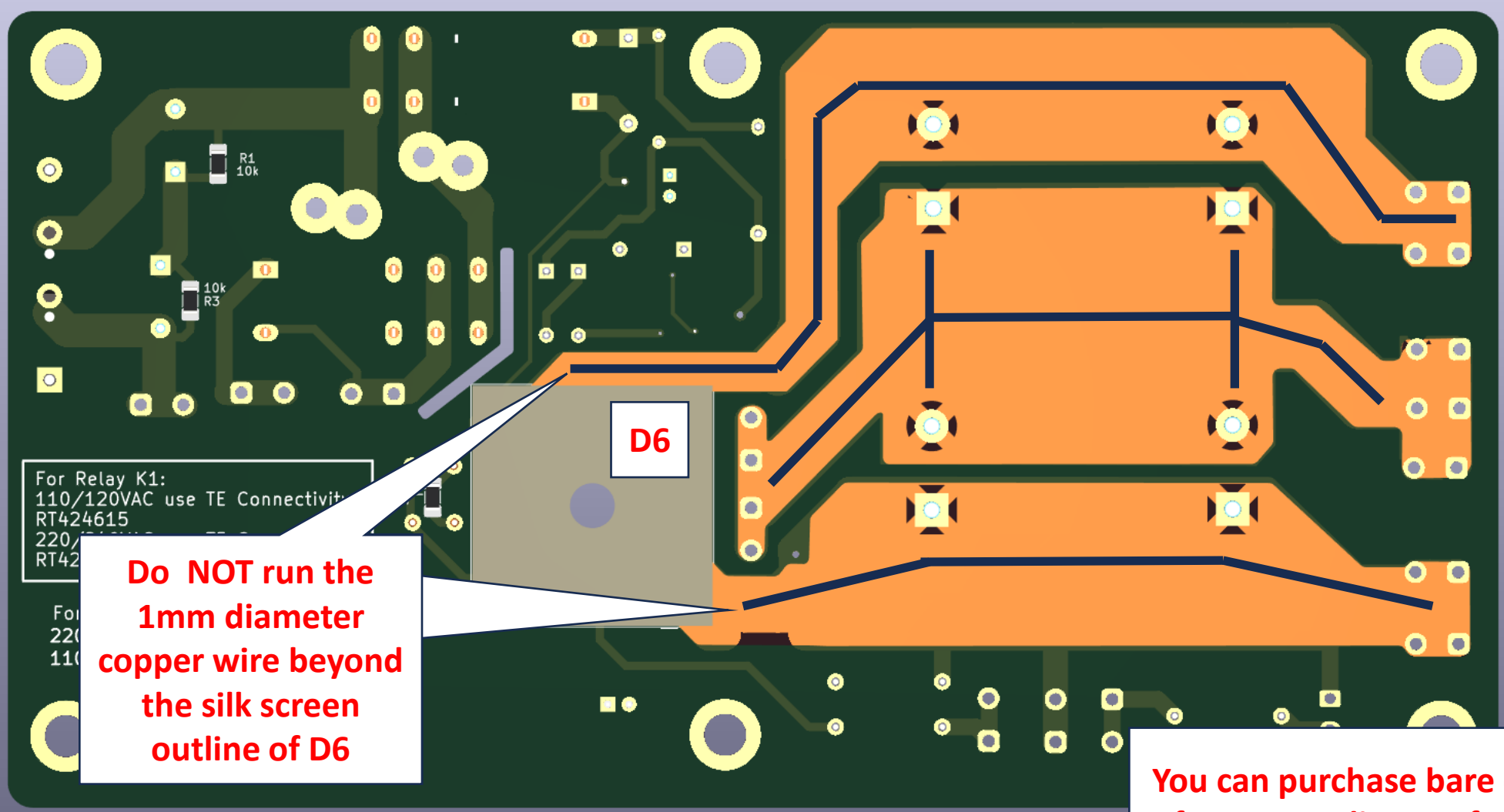

You can purchase bare copper wire of 1-1.5mm diamter from Amazon.

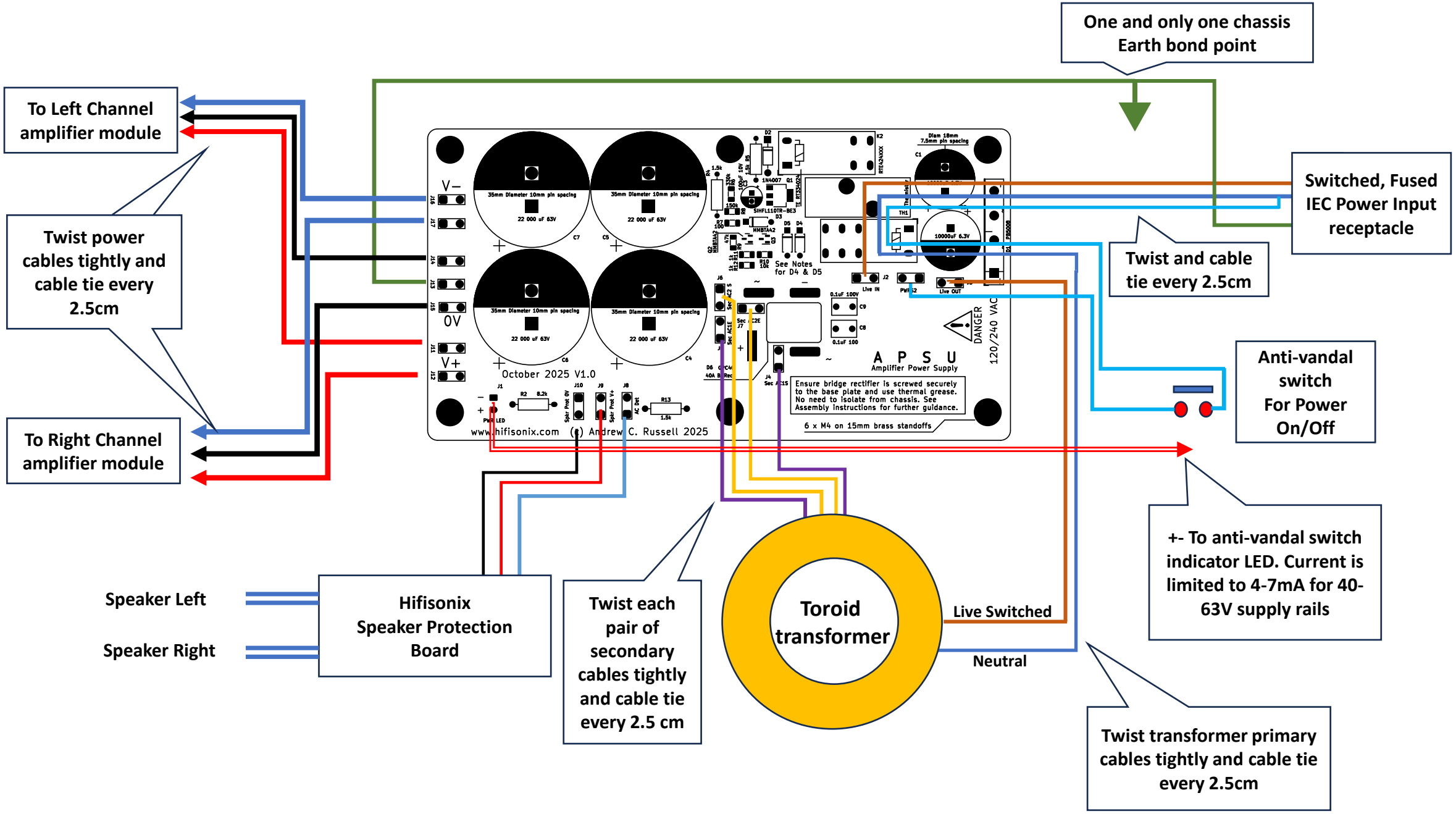

APSU Wiring Diagram

How to Wire the Transformer Secondaries

Dual Secondary's

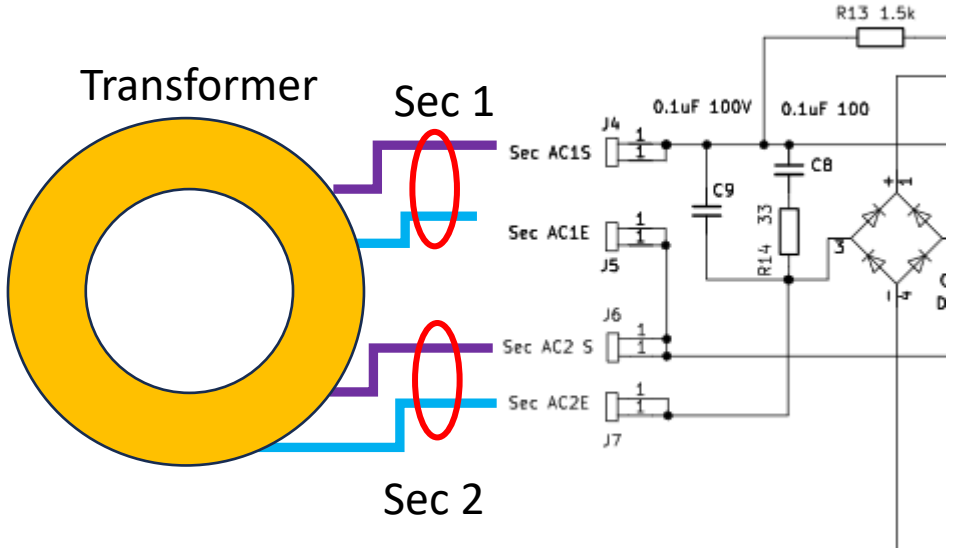

Centre Tapped Secondary

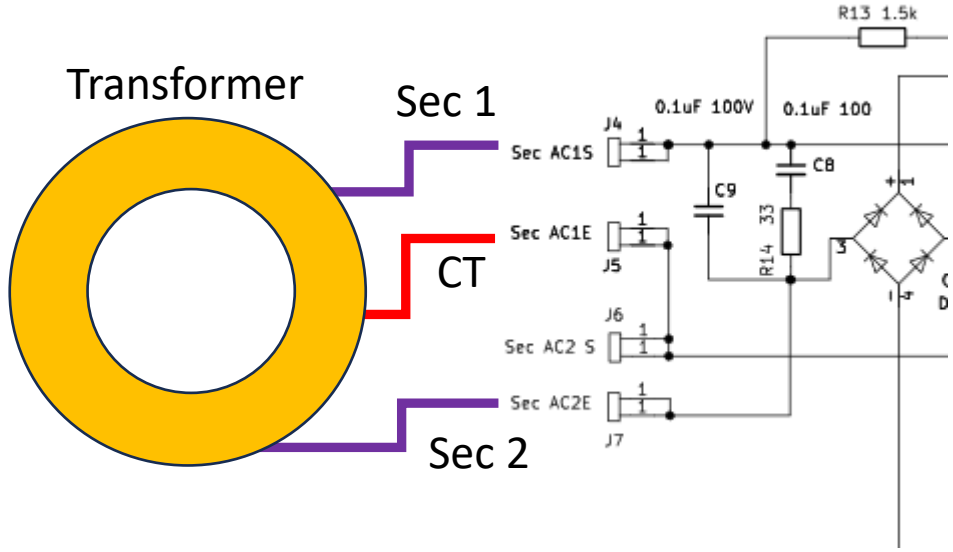

Important Note: All secondary cables between the transformer and APSU PCB must be tightly twisted and cable tied every 2.5 cm to reduce radiating loops

The primary cables from the IEC connector and to and from the switch to the APSU must be tightly twisted and cable tied every 2.5 cm to reduce radiating loops

APSU Drilling dimensions

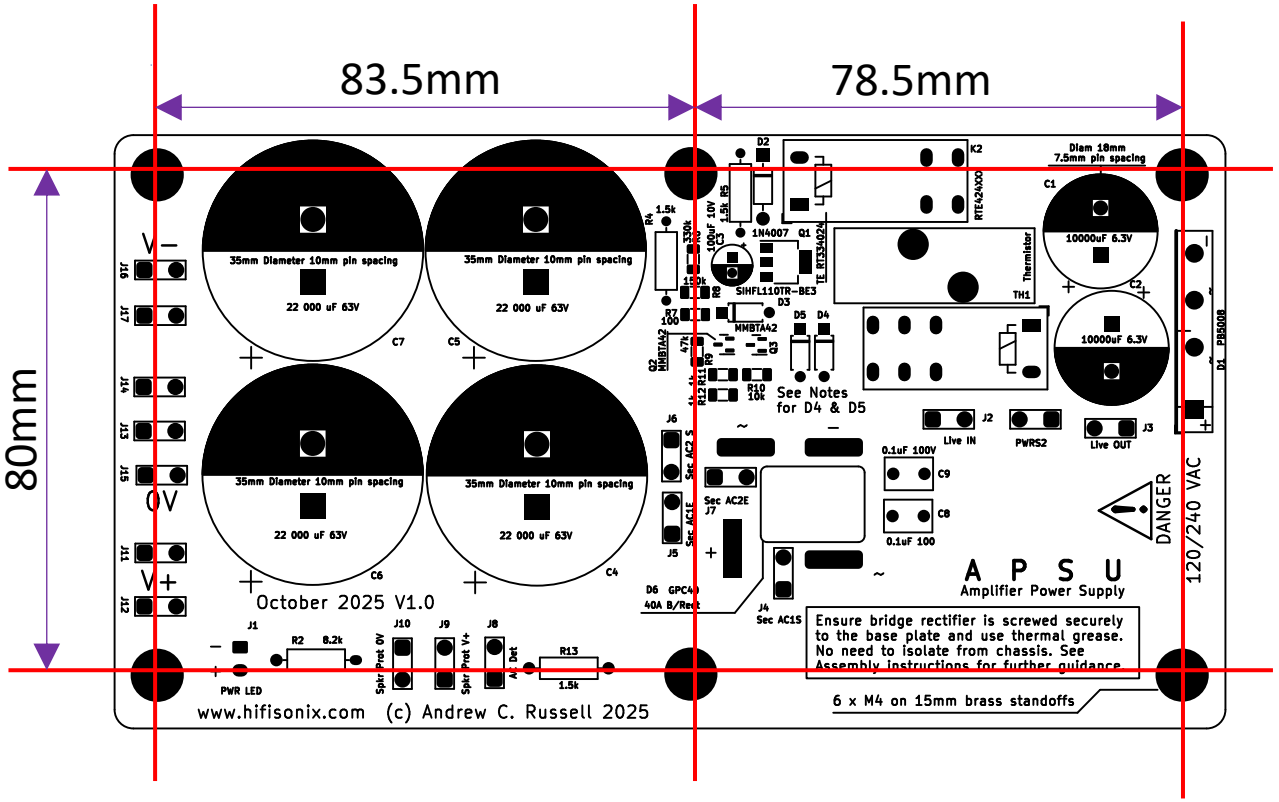

Mounting Holes are 6 off M4 on 15mm standoffs

Board dimensions are 177.5mm x 95mm

Mechanical assembly to the chassis – side view

See the next slide for assembly process

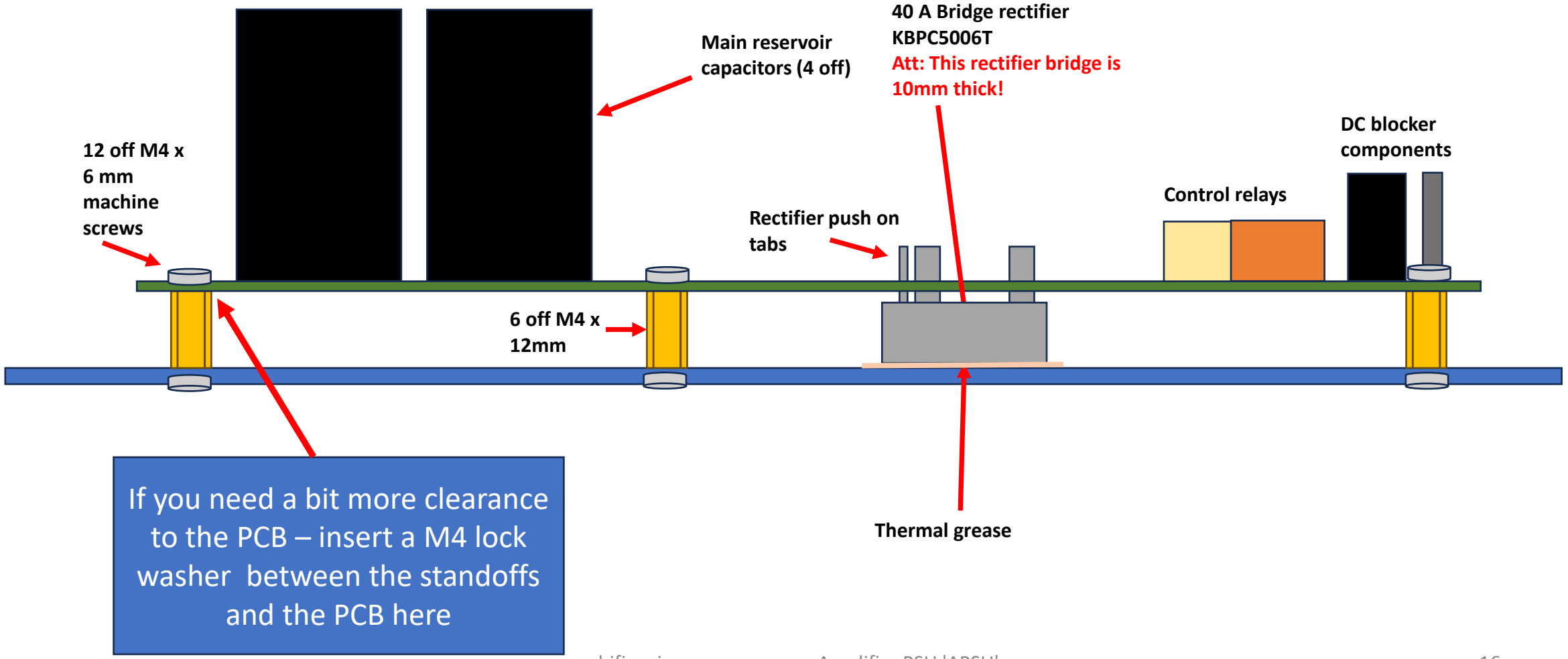

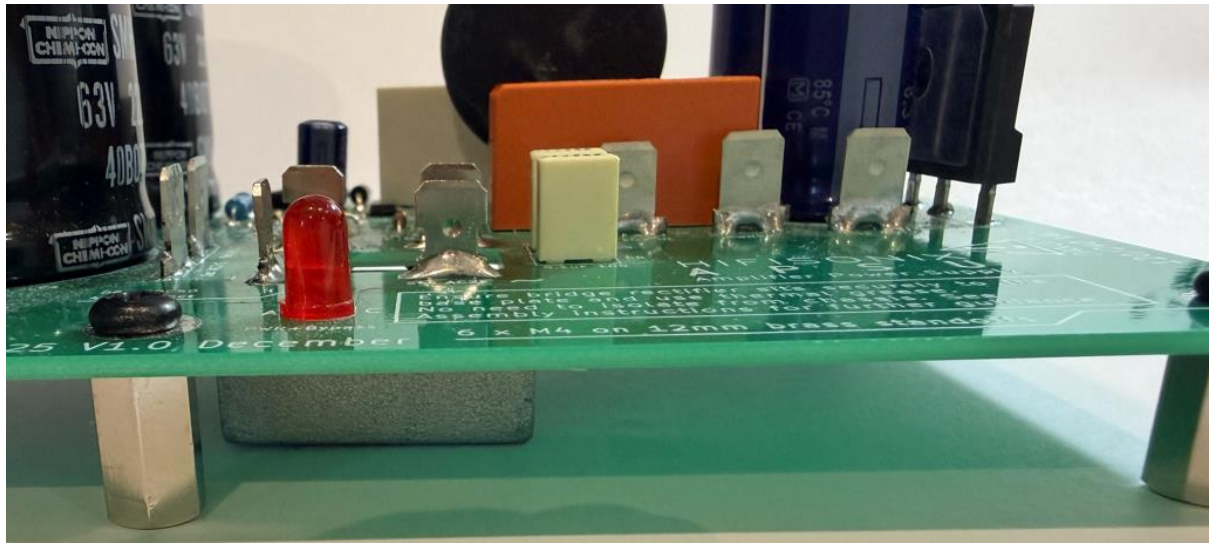

Important Assembly Procedure

1. Mount all 6 of the the 12mm standoffs to the PCB
2. Insert the bridge rectifier into the board and place the board with the loose bridge rectifier on a flat surface
3. Check visually that the Bridge rectivier case is not touching the PCB. If you are worried about the clearance, insert a lock washer between the PCB and the standoffs to give an additional ~1mm clearance
4. If all ok, keeping the PCB on the standoffs flat to the surface, solder the + and – terminals of the Bridge rectifier to the PCB on the top side. I suggest you don't solder the bridge rectifier AC terminals because this will eat into the available length of the rectifier push on lugs. If you are going to solder your secondary AC wires from the transformer, then this won't be a concern
5. When doing the final assembly of the module into your amplifier chassis, put some grease on the bottom surface of the rectifier where it mates with the mounting surface
6. The rectifier should make thermal contact in this way with the metal part of the chassis (I recommend this is on the bottom plate

KBPC5006T Bridge Rectifier - Notes

- If you use an alternative bridge rectifier (and there are other options that offer the same 40-50A current handling) that is thinner than the 10mm specified device above, you will have to adjust the hex brass standoff heights accordingly.
- The suggestion is add 2mm to the height of the bridge rectifier. You can always increase this by a further 1mm by using a lock washer between the standoff and the PCB
- Whatver you do, just make sure the bridge rectifier mates thermally with the metal base of your amplifier chassis.

Anti-vandal switch

TE Connectivity Push Button Switch, Latching, Panel Mount, 19.2mm Cutout, DPDT, 250V ac, IP67

RS Stock No.: **123-6066** | Mfr. Part No.: **AV1921000Q04** | Brand: TE Connectivity





Ensure the switch is latching with changeover contacts and they are rated for 250VAC and at least 30mA. I recommend a 16mm or 19.2mm diameter switch.

Power supply rail ripple voltage estimator.

The PCB accepts 4 off 35mm diameter capacitors with 10mm pin spacing. You can estimate the rail ripple if you decide to use values other than the 44,000uF specified

Resevoir capacitance in farads per rail 50 Hz case							
DC Load current per rail	0.01	0.015	0.018	0.022	0.027	0.033	0.047
0.5	0.50	0.33	0.28	0.23	0.19	0.15	0.11
1.5	1.50	1.00	0.83	0.68	0.56	0.45	0.32
2.5	2.50	2.50	2.50	2.50	2.50	2.50	2.50
3.5	3.50	3.50	3.50	3.50	3.50	3.50	3.50
4.5	4.50	3.00	2.50	2.05	1.67	1.36	0.96
5.5	5.50	3.67	3.06	2.50	2.04	1.67	1.17

Resevoir capacitance in farads per rail 60 Hz case							
DC Load current per rail	0.01	0.015	0.018	0.022	0.027	0.033	0.047
0.5	0.42	0.28	0.23	0.19	0.15	0.13	0.09
1.5	1.25	0.83	0.69	0.57	0.46	0.38	0.27
2.5	2.08	2.08	2.08	2.08	2.08	2.08	2.08
3.5	2.92	2.92	2.92	2.92	2.92	2.92	2.92
4.5	3.75	2.50	2.08	1.70	1.39	1.14	0.80
5.5	4.58	3.06	2.55	2.08	1.70	1.39	0.98

Total resevoir capacitance in farads per supply rail

These figures are the pk~pk ripple voltages at the reservoir capacitor output

You can estimate the pk~pk ripple voltage at the rectifier + reservoir capacitor output from

$$V_{pp} = \frac{I_{load}}{2 \cdot f_{in} \cdot C}$$

Recommended reservoir capacitors C4~C7

- For supply rails up to +-35VDC: Mouser 871-B41231A7229M000 (ripple current rating 7A per capacitor)
- For supply rails up to +-50 VDC: Mouser 598-SLPX223M050H9P3 (ripple current rating 7.8A per capacitor)
- For supply rails up to +-63 VDC: Mouser 661-ESMH630N223MA65S (ripple current rating 8.9A per capacitor)

Capacitors are 35 mm diameter with 10 mm pin spacing

Examples of consumables from Amazon required for wiring up the APSU.

Invest in a 6.3mm crimping tool!

Attention: only use fully insulated 6.3mm spade connectors!



ASHINER 580PCS Heat Shrink Tubing Wire Assortment Cable Wrap Sleeve Electric Insulation Tube Kit with Case (6 Colors, 11 Sizes)

Visit the ASHINER Store

4.4 ★★★★½ 744 ratings

#1 Best Seller in Tubes

£9.49 (£0.02 / count)

prime One-Day

FREE Returns

Buy 4, save 5% . Discount by Amazon. Terms | Shop items

Spread the cost of your purchase over £100.

Select Instalments by Barclays at checkout. Subject to financial status. Amazon is the credit broker.

Representative example: Credit limit £1200, Annual interest rate 12.2% variable, Representative APR 12.2% variable

Learn more about Instalments by Barclays

Note: This item is eligible for **FREE Click and Collect** without a minimum order subject to availability. Details

Colour Name: **Multicolored**

£8.99 (£0.02 / count) prime

£9.49 (£0.02 / count) prime

HIGHLY RATED

Sponsored | Based on star rating and number of customer ratings



Crimping Tool for Insulated Electrical Connectors - Ratcheting Wire Crimper - Crimping Pliers - Ratchet Terminal Crimper - Wire Crimp Tool...

4.4 ★★★★½ 7,802

-20% £23.99 £29.99

Save 10% with voucher

prime



Toprema Crimping Tool for Heat Shrink Connectors Ratcheting Wire Crimper Ratchet Terminal Plier Hand Crimp Tool

4.4 ★★★★½ 66

£19.75

prime FREE One-Day



6.3mm Male Female Insulated Spade Crimp Terminal Connectors Wire Cable Electrical (6.3mm Female Insulated (Pack of 100), Blue)

Brand: Switch Electronics

4.4 ★★★★½ 74 ratings

£5.45 (£0.05 / count)

prime One-Day

FREE Returns

Spread the cost of your purchase over £100.

Select Instalments by Barclays at checkout. Subject to financial status. Amazon is the credit broker.

Representative example: Credit limit £1200, Annual interest rate 12.2% variable, Representative APR 12.2% variable

Learn more about Instalments by Barclays

Note: This item is eligible for **FREE Click and Collect** without a minimum order subject to availability. Details

Size Name: **100 x Female Insulated**

100 x Female | **100 x Female Insulated** | 100 x Male

Colour Name: **Blue**

Colour	Blue
Gauge	16.0
Stud size	6 3 month

Delivery | Pick-up

£5.45 (£0.05 / count)

prime One-Day

FREE Returns

FREE delivery **Tomorrow, November 17**. Order within 1 hr 4 mins. Details

Deliver to Andrew - Dereham NR20 3

Add to Basket

Buy now

Secure transaction

Dispatches from Amazon

Sold by LED-Essential

Return policy: Returnable until Jan 31, 2023

Add to List

Have one to sell?

Sell on Amazon